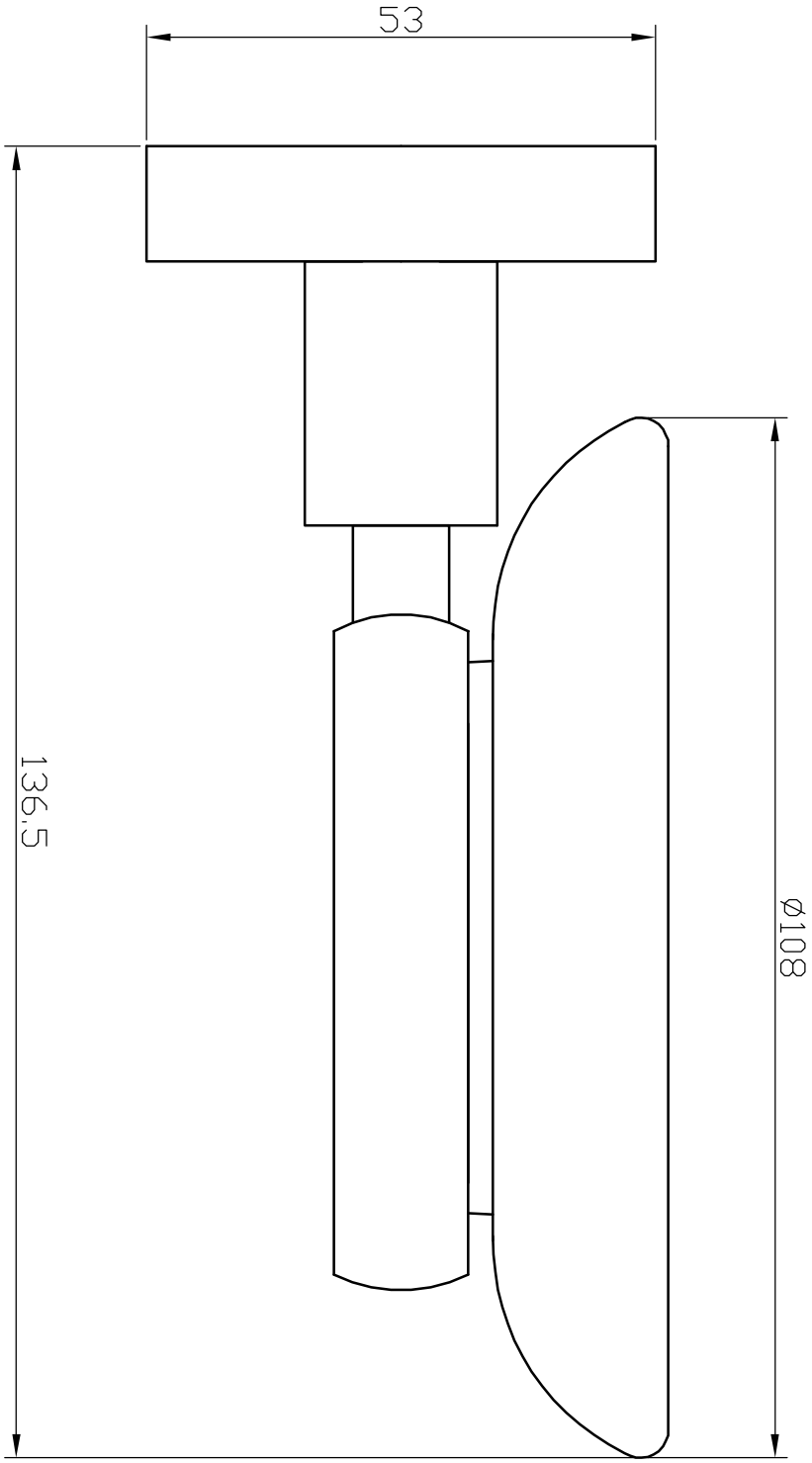
53
136.5
Ø108